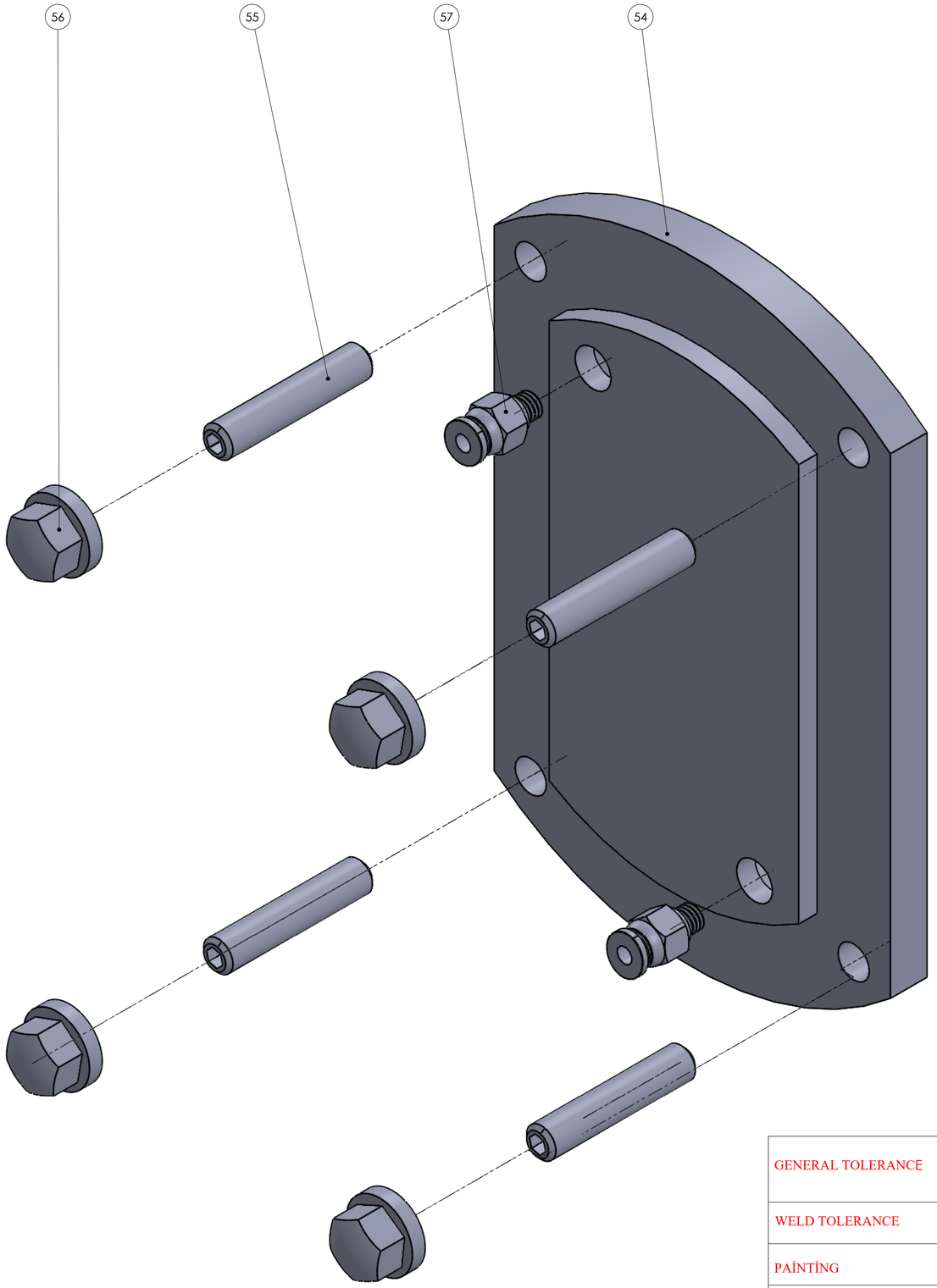

POSITION	DESCRIPTION	QUANTITY	MATERIAL
57	1/8 " PIPE FITTING	2	-----
56	M8 HEXAGONAL NUT	4	AISI-304
55	M8X50 STUD	4	AISI-304
54	FRONT HEATING COVER	1	AISI-304

GENERAL TOLERANCE	ISO 2768	DRAWN BY		DATE		FLUSSMANN		
WELD TOLERANCE		CONTROL		MATERIAL				
PAİNTİNG		APROVAL		WEIGHT		DEGREE	A	
COATİNG		GROUP NAME	LOBE PUMP			GROUP/POS NO	A	
HEAT TREAMENT		PART NAME	FRONT HEATING JACKET			PART NO	FDP+ A 0 00 54	
HARDNESS								